150W DC/DC Series

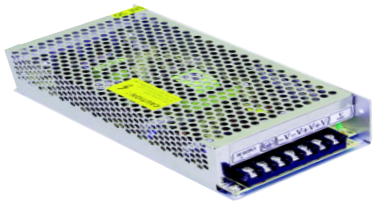

- High reliability
- Built-in EMI filter
- 100% full load burn-in test
- Protections: over current/ short circuit
- 1 year warranty
- F615 199 x 98 x 50(mm)

DC input voltage 24VDC, 48VDC, 110VDC
Line regulation (full load) ..... ≤±0.5%
Output voltage adjust range ..... ±10%
Output over current protection ..... 110~130%
Withstand voltage ..... I/P -O/P: 1.0KVDC/1min
I/P -F/G: 1.0KVDC/1min
O/P-F/G: 0.5KVDC/1min
Isolation resistance ..... >100MΩ@500VDC
Operating temp. & humidity ..... -10℃~+50℃, 20%~90%RH (non condensing)
Storage temp. & humidity ..... -20℃~+85℃, 20%~95%RH (non condensing)
Safety standards ..... design refer to LVD
EMC standards ..... design refer to EN55022, EN61000-4
Cooling method ..... convection

Model	DC Output		Load regul.	R&N	Efficiency
HF150W-SD**-5	5V	30.0A	0.5%	100mV	70%
HF150W-SD**-12	12V	12.5A	0.5%	120mV	72%
HF150W-SD**-24	24V	6.3A	0.5%	150mV	76%
HF150W-SD**-48	48V	3.1A	0.5%	200mV	82%

**means DC input voltage, such as 24, 48, 110, etc.

Drawing

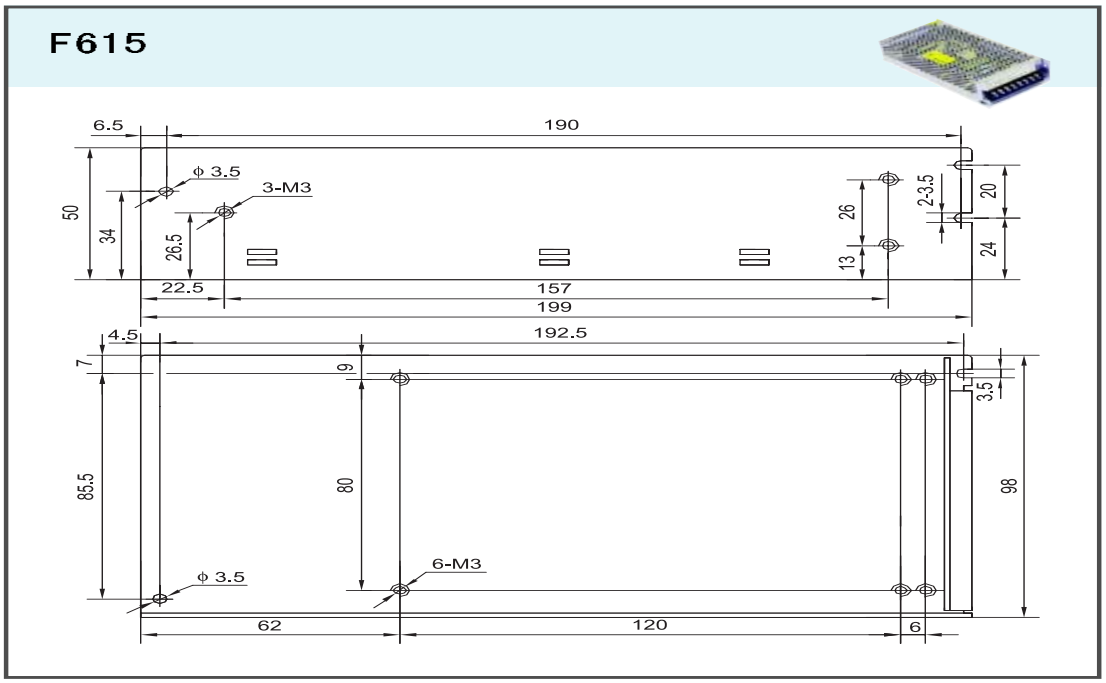

Anda-Olsen AS
Breivika Industrivei 47, 6018 Aalesund, Norway
Tel. +47 70 17 89 70. Fax +47 70 17 89 71
post@anda-olsen.no www.anda-olsen.no